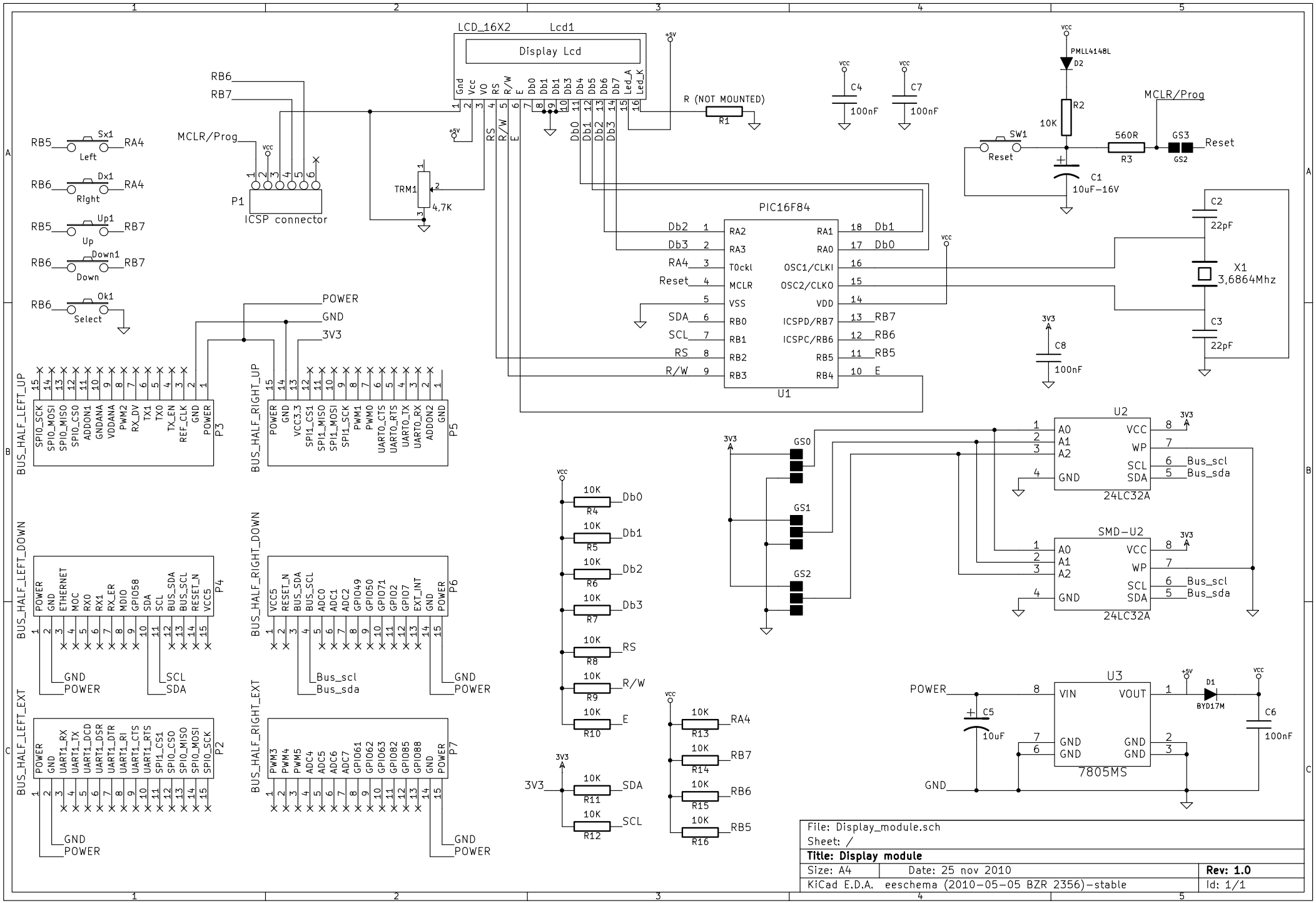
LCD_16X2 Lcd1
Display Lcd
Gnd Vcc VO RS R/W E Db0 Db1 Db1 Db3 Db4 Db5 Db6 Db7 Led_A Led_K
R (NOT MOUNTED) R1
C4 100nF
C7 100nF
PMLL4148L D2
R2 10K
MCLR/Prog
SW1 Reset
560R R3
GS3 GS2 Reset
C1 10uF-16V
C2 22pF
C3 22pF
X1 3,6864Mhz
PIC16F84
U1
RA2 RA3 T0ckl MCLR VSS RB0 RB1 RB2 RB3
RA1 RA0 OSC1/CLKI OSC2/CLKO VDD ICSPD/RB7 ICSPC/RB6 RB5 RB4
Db2 Db3 RA4 Reset SDA SCL RS R/W
Db1 Db0 RB7 RB6 RB5 E
C8 100nF
RB5 Sx1 Left RA4
RB6 Dx1 Right RA4
RB5 Up1 Up RB7
RB6 Down1 Down RB7
RB6 Ok1 Select
MCLR/Prog
P1 ICSP connector
TRM1 4,7K
POWER
GND
3V3
BUS_HALF_LEFT_UP P3
SPIO_SCK SPIO_MISO SPIO_CSO ADDON1 GNDANA VDDANA PWM2 RX_DV TX1 TXO TX_EN REF_CLK GND POWER
BUS_HALF_RIGHT_UP P5
POWER GND VCC3.3 SPI1_CS1 SPI1_MISO SPI1_MOSI SPI1_SCK PWM1 PWM0 UART0_CTS UART0_RTS UART0_TX UART0_RX ADDON2 GND
BUS_HALF_LEFT_DOWN P4
POWER GND ETHERNET MOC RXO RX1 RX_ER MDIO GPIO58 SDA SCL BUS_SDA BUS_SCL RESET_N VCC5
GND POWER SCL SDA
BUS_HALF_RIGHT_DOWN P6
VCC5 RESET_N BUS_SDA BUS_SCL ADC0 ADC1 ADC2 GPIO49 GPIO50 GPIO71 GPIO2 GPIO7 EXT_INT GND POWER
Bus_scl Bus_sda GND POWER
BUS_HALF_LEFT_EXT P2
POWER GND UART1_RX UART1_TX UART1_DCD UART1_DSR UART1_DTR UART1_RI UART1_CTS UART1_RTS SPI1_CS1 SPIO_CSO SPIO_MISO SPIO_MOSI SPIO_SCK
GND POWER
BUS_HALF_RIGHT_EXT P7
PWM3 PWM4 PWM5 ADC4 ADC5 ADC6 ADC7 GPIO61 GPIO62 GPIO63 GPIO82 GPIO85 GPIO88 GND POWER
GND POWER
10K R4 Db0
10K R5 Db1
10K R6 Db2
10K R7 Db3
10K R8 RS
10K R9 R/W
10K R10 E
10K R11 SDA
10K R12 SCL
10K R13 RA4
10K R14 RB7
10K R15 RB6
10K R16 RB5
GS0 GS1 GS2
U2 24LC32A
SMD-U2 24LC32A
A0 A1 A2 GND VCC WP SCL SDA
Bus_scl Bus_sda
U3 7805MS
VIN VOUT GND GND
POWER GND
C5 10uF
D1 BYD17M
C6 100nF
File: Display_module.sch
Sheet: /
Title: Display module
Size: A4
Date: 25 nov 2010
Rev: 1.0
KiCad E.D.A. eeschema (2010-05-05 BZR 2356)-stable
Id: 1/1